Trio GENERATOR

VOLVO PENTA

MADE IN TURKEY

DATAKOM

D-500-LITE

INTERNET ENABLED GENSET CONTROLLER

International Organization for Standardization ISO 14001:2015

ISO 9001

OUTPUT VALUES

Standby Power	Voltage	230/400
Standby Power	kVA	770
Standby Power	kW	616
Standby Power	Amper	1108
Prime Power	Voltage	230/400
Prime Power	kVA	700

Prime Power	kW	560
Prime Power	Amper	1010

DIESEL ENGINE

Brand	VOLVO
Model	TWD1645GE
Max. Total Output Pow. (kWm/hp)	654/890
Cylinder Displacement (lt)	16.12
Cylinder Orientation	6 Single Line
Bore x Stroke(mm*mm)	144 x 165
Compression Ratio	16;8
Governor Type	Electronic
Rotation	1500 RPM
Aspiration System	TurboCharged-Intercooler
Injection	Direct
Cooling System	Water Cooled
Electrical System(V DC)	24
Oil Capacity (lt)	48
Engine Coolant Capacity (lt)	100
Fuel Cons. %50 (lt/h)	80
Fuel Cons. %75 (lt/h)	113
Fuel Cons. %100 (lt/h)	146

ALTERNATOR

Standby Power (kVa/kw)	770/616
Prime Power (kVa/kw)	700/560
Brand	LEROY SOMER
Output Voltage (V)	231/400
Frequency (Hz)	50
Stationary Vol. Regulation(±)	0,01
Short Circuit Current	%300 (10 sec)
Insulation	H
Protection	IP23
E ciency (%)	92
Overloading	110% for 1 hour
Power Factor (cos Q=0.8)	0,8
Tot. Harmonic Dist. Rate	<1 %
Connection Type	Star
Number of Pole	4
Number of Bearing	Single

DIMENSIONS & WEIGHT

Without Canopy	Width	2000 mm
Without Canopy	Length	4500 mm
Without Canopy	High	2500 mm
Without Canopy	Weight	4520 kg
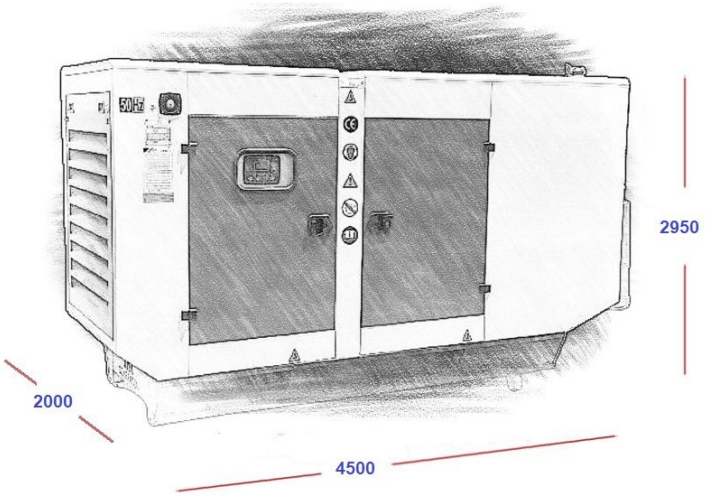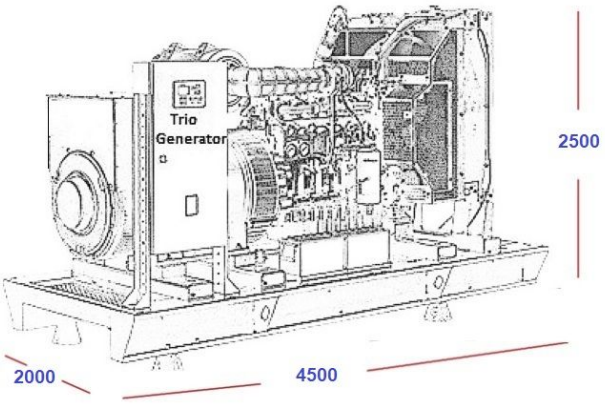
Without Canopy	Fuel Tank Capacity	1200 lt
With Canopy	Width	2000 mm
With Canopy	Length	4500 mm
With Canopy	High	2950 mm
With Canopy	Weight	5100 kg
With Canopy	Fuel Tank Capacity	1200 lt